TAKSTAR® 得胜

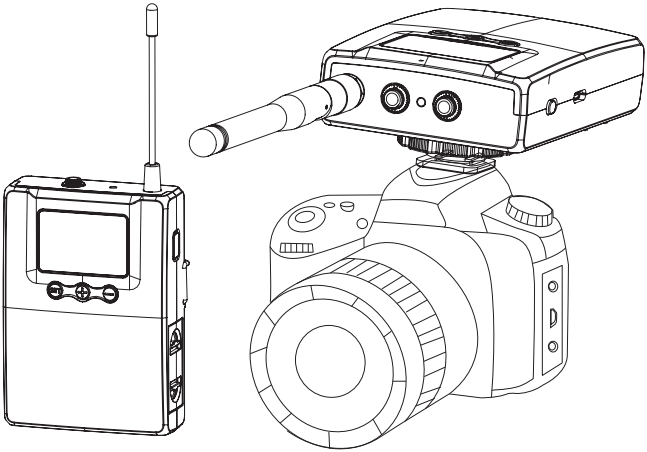

SGC-200W | 无线摄像麦克风

Wireless Camera Microphone

使用手册 | User Manual

中文目录……1-16
Content……17-35

前言……2
产品特性……2
适用范围……2
包装清单……3
单通道……3
双通道……3
技术参数……4
综合参数……4
接收器……4
发射器……4
功能示意……5
发射器……5
接收器……7
使用说明……10
发射器安装连接……10
单反/微单安装连接……10
专业摄像机安装连……11
手机安装连接……12
音量调节方法……13
对频方法……13
注意事项……14
故障排除……15
安全警告……16
关于图标含义解释……16

■ 前言

尊敬的用户：

感谢您选购得胜SGC-200W 无线摄像麦克风，为了您能够更好的了解使用本产品，建议您在使用前仔细阅读本说明书。

若存在有疑问或者您有宝贵的建议，可通过拨打得胜官方服务热线400 6828 333或微信扫描二维码关注得胜官方公众号与我们联系。

■ 产品特性

- 针对新闻采访、视频拍摄而设计，适用于摄像机、单反及手机等设备；
- UHF无线传输，摆脱复杂的线材连接，让摄像采访不再有束缚；
- 自动对频技术，操作简便，抗干扰强，空旷地带使用距离约100米；
- 实时监听功能，监听声音是否在正常录制状态，防止声音没有录进去；
- 具有监听音量、录音音量调节功能，方便不同的拍摄设备调节需要；
- 采用LOW-CUT降噪处理，有效屏蔽环境噪音的拾取，拾音更干净；
- 双通道独立输出和MIX混合输出音频控制，方便声音的后期分轨处理；

  备注：仅双通道机型具有此功能
- 具有Type-C电源接口，可外接移动电源，不怕断电；
- 采用2节AA碱性干电池供电，连续工作约10小时(视电池容量而有所差异）。

■ 适用范围

新闻采访、影视录音、节目主持、专题访谈等

■ 包装清单

单通道

接收器 1个
发射器 1个
领夹麦克风 1个
麦克风夹子 1个
防风棉 1个
3.5mm 音频线 1个
3.5mm 转XLR音频线 1个
手机转换线 1条
5号干电池 4节
接收天线 1根
说明书 1份

双通道

接收器 1个
发射器 2个
领夹麦克风 2个
麦克风夹子 2个
防风棉 2个
3.5mm 音频线 1个
3.5mm 转XLR音频线 1个
手机转换线 1条
5号干电池 6节
接收天线 2根
说明书 1份

■ 技术参数

综合参数:

频率范围：470~960 MHz(分段)

通道数：单通道 / 双通道

信道数 : 50个（单通道）

A、B各25个（双通道）

调频宽度：30MHz

信道间隔：600KHz

调制/解调方式：FM

静音控制：导频

频率响应：20Hz~18KHz

频率稳定度：±0.015%

信噪比：≥92dB A+（line out）

失真度：≤0.8% （at 1KHz）

使用距离：约100米（空旷地带）

麦克风规格：电容式全指向

发射器 :

麦克风输入方式：3.5mm插座

发射器供电：2节AA电池

发射器功率：≤10mW

低切：200Hz 5dB/Oct

使用时间 : 约10小时

（视电池容量有所差异）

尺寸(LxWxH)：90x65x25mm

重量：约 83g

接收器:

内置供电：2节AA电池

外接供电：Type C接口

天线接口：SMA/阻抗50欧姆

接收灵敏度：≤-80dBm (接线测试)

音频输出方式：3.5mm线路输出

+3.5mm耳机输出

耳机输出功率：25mW(RMS)@32Ω

使用时间：约10小时（单通道）

约8小时（双通道）

（视电池容量有所差异）

尺寸(LxWxH)：90x65x25mm

重量：约 93g

注：以上数据由得胜实验室测得并拥有最终解释权。

■ 功能示意

发射器：

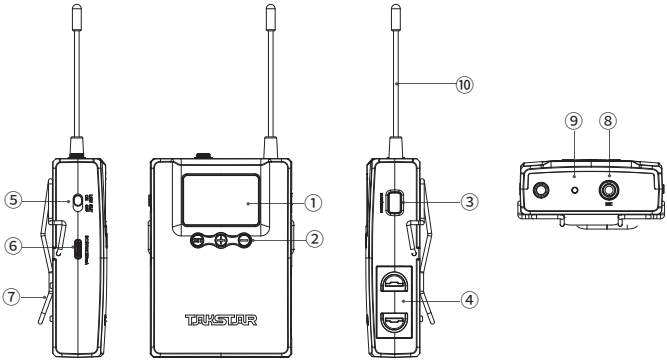

① 屏示屏：显示工作频率、麦克风信号、电池电量等信息；

② 功能按键：用于对频操作；

③ 电源开关键：长按两秒开关机，点按开启或关闭静音功能；

④ 电池仓：用于安装5号电池池；

⑤ 低切开关：拨到“ON”位置，可过滤掉200Hz以下的低频环境噪声（如交通声、空调声、震动声等），拨到“OFF”恢复正常拾音；

⑥ Type-C电源接口：外接移动电源给发射器供电；

⑦ 背扣：用于将发射器扣于腰带或裤腰上使用；

⑧ 麦克风插座：用于连接3.5mm接口的麦克风；

⑨ 工作指示灯：满电常亮绿灯，低电常亮红灯，电量严重不足时，闪烁红灯；

⑩ 外置天线：1/4波长天线，增强信号发射距离。

发射器 显示屏

单通道

① 静音
② 工作频率
③ 麦克风声音动态
④ 低切
⑤ 电池电量

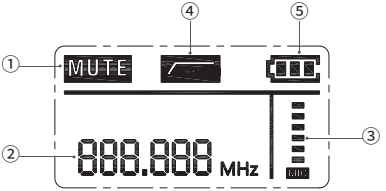

双通道

① 静音
② 工作频率
③ 麦克风声音动态
④ 低切
⑤ 电池电量
⑥ 通道

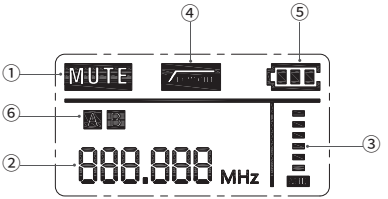

① 静音：开启静音时显示，关闭静音时消失。电量严重不足时，自动静音，以警示及时更换电池；

② 工作频率：显示当前发射器工作频率；

③ 麦克风声音动态：跟随麦克风声音信号大小动态变化；

④ 低切：开启低切时显示，关闭低切时消失；

⑤ 电池电量：以电量格数多少来表示当前发射器电池电量，电量严重不足时，电池符号闪烁；

⑥ 通道：双通道发射器分为A、B两个发射器，A发射器显示“A”，B发射器显示“B”，方便与双通道接收器进行对频操作。(仅双通道发射器具有此功能)

接收器:

单通道

① 显示屏
② 功能按键
③ 电源开关键
④ 电池仓
⑤ 天线
⑥ 线路输出插座
⑦ 耳机输出插座
⑧ 工作指示灯
⑨ Type-C电源接口
⑩ 冷靴座
⑪ 1/4螺孔
⑫ 旋钮

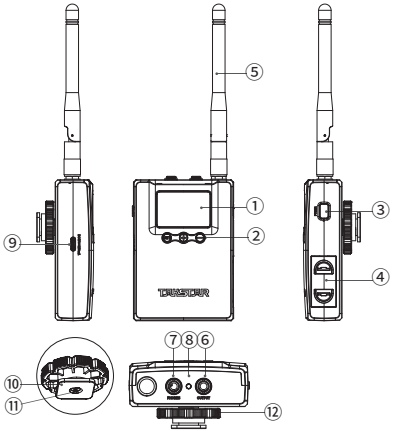

双通道

① 显示屏
② 功能按键
③ 电源开关键
④ 电池仓
⑤ 天线
⑥ 线路输出插座
⑦ 耳机输出插座
⑧ 工作指示灯
⑨ Type-C电源接口
⑩ 冷靴座
⑪ 1/4螺孔
⑫ 旋钮
⑬ 混音开关

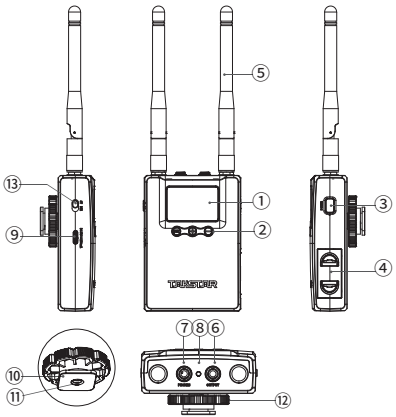

① 屏示屏：显示工作频率、麦克风信号、电池电量等信息；

② 功能按键：对频操作、音量调整等；

③ 电源开关键：长按两秒开关机；

④ 电池仓：用于安装5号电池池；

⑤ 天线：外置天线，稳定信号接收；

⑥ 线路输出插座：用于连接输出声音信号到拍摄设备上；

⑦ 耳机输出插座：用于连接监听耳机，实时监听拾音效果；

⑧工作指示灯：满电常亮绿灯，低电常亮红灯，电量严重不足时，闪烁红灯；

⑨ Type-C电源接口：外接移动电源给接收器供电；

⑩ 冷靴座：用于将接收器安装固定到拍摄设备或拍摄杆上；

⑪ 1/4螺孔：用于将接收器安装固定到拍摄杆上；

⑫ 旋钮：用于将接收器锁紧固定到拍摄设备或拍摄杆上；

⑬ 混音开关：当拨到“ST”位置时，声音以立体声方式录音输出，方便后期对A、B两个通道的声音进行分别处理；拨到“MIX”位置时，声音以混合的方式录音输出，A、B通道的声音将混合成一个信号输出，后期不能对声音进行分别处理。（仅双通道接收器具有此功能）

接收器 显示屏

单通道

① 耳机输出
② 线路输出
③ 工作频率
④ 声音输出动态
⑤ 耳机/线路输出大小
⑥ 电池电量

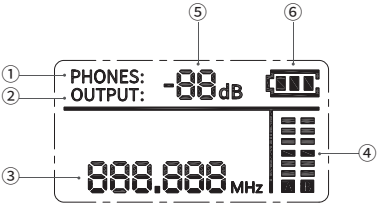

双通道

① 耳机输出
② 线路输出
③ 工作频率
④ 声音输出动态
⑤ 耳机/线路输出大小
⑥ 电池电量
⑦ A通道频率
⑧ B通道频率

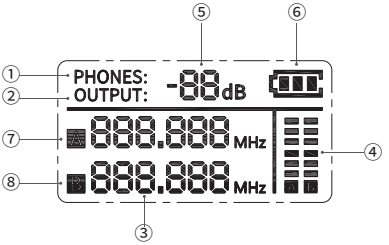

① 耳机输出：用于监听输出音量调节；
② 线路输出：用于录音输出音量调节；
③ 工作频率：显示当前接收器工作频率。单通道接收器只有一组工作频率，双通道率分为A、B两组工作频率；
④ 麦克风声音动态：跟随麦克风声音信号大小动态变化。双通道接收器分为A、B两组麦克风信号，分别表示A、B两个通道的麦克风信号情况。单通道只有一个麦克风信号，则合并显示；
⑤ 耳机/线路输出大小： 当在“PHONES”状态时，用于表示耳机输出音量大小；当在“OUTPUT”状态时，用于表示录音输出音量大小；
⑥ 电池电量：以电量格数多少来表示当前接收器电池电量，电量严重不足时，电池符号闪烁。

■ 使用说明

发射器安装连接

1. 安装电池：同时按压电池仓伸缩键取出电池仓；将2节5号碱性电池按电池仓标明的正负极性安装，注意电池极性不要装反；将电池仓推送入发射器电池卡座内，直到电池仓伸缩键“哒”的一声扣紧到位；如下图A
2. 将麦克风插头插入发射器的"MIC"插座，并锁紧固定；如下图B

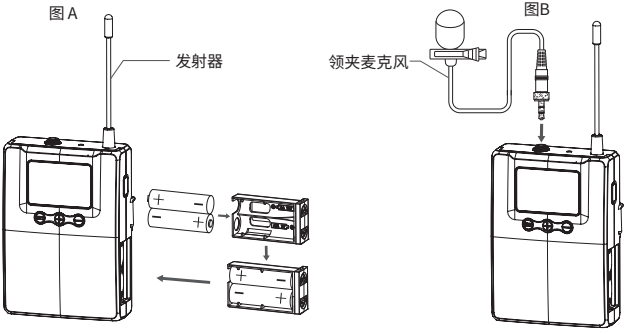

单反/微单安装连接

1. 将接收器的冷靴座卡入单反、微单的热靴插槽中，顺时针旋转旋钮将接收器锁紧固定；如下图
2. 用3.5mm音频线带有螺母锁紧装置的一头与接收器的“OUTPUT”插座连接，并锁紧固定，另一头和单反、摄像机的"MIC”插座连接；如下图：
3. 请将监听耳机（监听耳机需另购）连接到接收器“PHONES”插口；如下图：
4. 打开单反/微单录音（录像）测试是否正常，如不能正常录音则参照本说明书的故障排除部分进行处理；
5. 根据连接的单反/微单以及监听耳机实际情况，适当的调节接收器的录音输出大小及监听输出大小，调节方法详见本说明书关于音量调节方法部分。

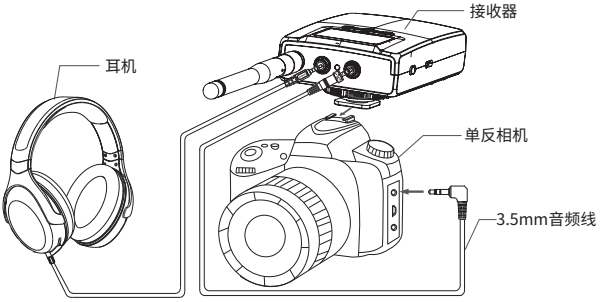

专业摄像机安装连接

1. 将接收器的冷靴座卡入专业摄像机的热靴插槽中，顺时针旋转旋钮将接收器锁紧固定；如下图
2. 用3.5mm转XLR音频线带有螺母锁紧装置的一头与接收器的“OUTPUT”插座连接，并锁紧固定，另一头和单反、摄像机的卡侬插座连接；如下图
3. 请将监听耳机（监听耳机需另购）连接到接收器“PHONES”插口；如下图
4. 打开专业摄像机录音（录像）测试是否正常，如不能正常录音则参照本说明书的故障排除部分进行处理；
5. 根据连接的专业摄像机以及监听耳机实际情况，适当的调节接收器的录音输出大小及监听输出大小，调节方法详见本说明书关于音量调节方法部分。

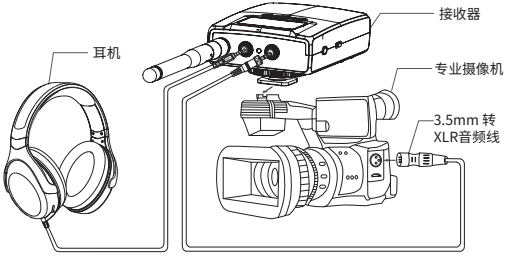

手机安装连接

1. 将接收器的冷靴座卡入拍摄支架的冷靴插槽中，或通过接收器的1/4螺孔与拍摄杆的螺旋接头连接，并锁紧固定；如下图
2. 将手机转换线连接到手机、平板或单孔笔记本电脑的3.5mm接口。用3.5mm音频线带有螺母锁紧装置的一头与接收器的“OUTPUT”插座连接，并锁紧固定，另一头与手机转换线上标有“ 🎙 ”符号的接口连接；如下图:
3. 请将监听耳机（监听耳机需另购）连接到接收器“PHONES”插口；如下图:
4. 打开手机录音（录像）测试是否正常，如不能正常录音则参照本说明书的故障排除部分进行处理；
5. 根据连接的手机、平板、电脑以及监听耳机实际情况，适当的调节接收器的录音输出大小及监听输出大小，调节方法详见本说明书关于音量调节方法部分。

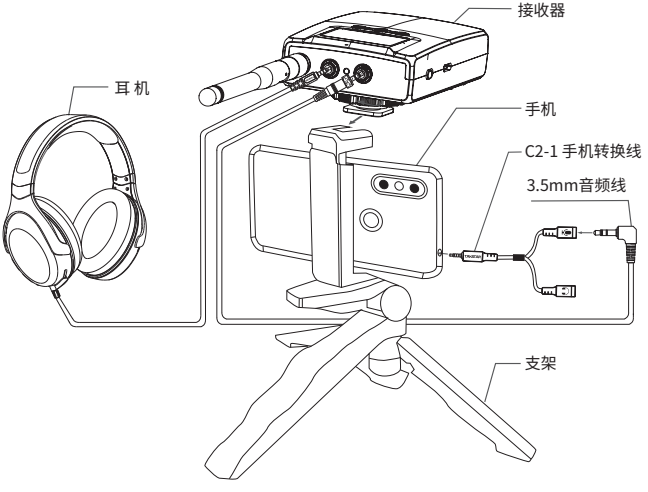

音量调节方法

监听音量调节

1. 点按接收器“SET”键，“PHONES：XX”闪烁；（XX表示显示的数值）
2. 点按“+”增加监听音量，点按“-”键减小监听音量，（12级可选）；
3. 长按“SET”键确认并退出。

录音音量调节

1. 点按接收器“SET”键，“OUTPUT：XXdB”闪烁；（XX表示显示的数值）
2. 点按“+”键增加录音音量，点按“-”键减小录音音量，(-10dB～12dB可选);
3. 长按“SET”键确认并退出。

补充说明：由于单反、专业摄像机、手机、平板等拍摄设备所接受的录音输入增益要求有所不同，因此需要根据所接的拍摄设备情况对接收器输出录音音量进行适当调整。如单反、专业摄像机等拍摄设备应适当调小接收器的录音输出，手机、平板等设备应适当增加接收器的录音音量输出。调节标准以录音作品不出现爆音、失真为宜。

对频方法

产品出厂时频率已默认配对好，开机会自动连接，无需配对。如遇有信号干扰，可按下面方法进行重新配对。

A: 单通道对频方法

一、自动对频（发射器与接收器保持1米以内距离）

1. 长按接收器“SET”键约2秒，显示屏频率闪烁，松开按键；此时立即长按接收器“+”或“-”键，待频率由闪烁状态变为“— — —”动态显示时，表示进入扫频状态，松开按键；
2. 长按发射器“SET”键约2秒，显示屏频率闪烁，松开按键；此时立即长按发射器“+”或“-”键约2秒，待频率由闪烁状态变为“— — —”动态显示时，松开按键；
3. 对频大约在10秒钟内完成，当发射器与接收器的频率同时由“— — —”动态显示变为静态数值，自动对频完成；如对频成功，发射器与接收器频率将保持一致。反之发射器与接收器的频率不一致，说明对频失败，请按上面的对频方法重新配对。

二：手动对频

1. 长按接收器 “SET”键约2秒，显示屏频率闪烁，松开按键；此时立即点按接收器“+”或“-”键，调到所需要的频率，等待5秒钟后接收器自动保存当前选择的频率后退出，或直接长按“SET”键约2秒确认退出；
2. 长按发射器“SET”键约2秒，显示屏频率闪烁，松开按键；此时立即点按发射器“+”或“-”键，调到和接收器对应频率后，等待5秒钟后发射器自动保存当前选择的频率后退出，或直接点按“SET”键确认退出，对频完成。

补充说明：发射器及接收器在进入手动对频后，无操作“+”或“-”键选频，5秒钟后恢复到原来的频率状态。

B: 双通道对频方法

1. 先长按接收器“SET”键约2秒进入通道选择，然后点按“SET”键跳转切换A、B通道；
2. 后面的对频方法与单通道对频方法雷同，请参考单通道的对频方法进行操作，不再赘述。

注意事项

1. 接收器采用全向天线时，天线离墙体（特别是金属体）应有0.5米距离;
2. 接收范围和很多因素相关，变化很大，在传输方向无大型金属件阻挡，可以获得更好的传输效果;
3. 如果接收条件不够理想，可以采用延长线，外接高增益天线，甚至天线放大器，可以达到非常明显的增距效果;
4. 当接收器面板正对使用方向时,或接收器内置在金属箱体内时，将天线接于前面板会有更好的接收效果;
5. 产品使用中出现红灯闪烁时，表示电池电量不足，需更换电池;
6. 超过一周不使用本产品时，请取出机内电池，以免电池漏液导致产品损坏；
7. 正确的调整发射器咪头与嘴的距离，太近会引起调制过大而产生信号失真，太远的灵敏度使调制度不够，将会降低信噪比。建议嘴巴距咪头约5～15厘米。

故障排除

故障现象	故障原因
接收器连接断开、不能连接发射器	距离超出使用范围，请缩短使用范围：室外有效使用距离约为100米，如有遮挡或室内使用时，距离会相应缩短
	可能受到干扰，请调整更换工作频率
大声讲话时声音失真	领夹麦克风为高灵敏度拾音器，请调整麦克风和声源之间的距离
	相机(摄像机)的麦克风输入 LEVEL 太大，请将相机(摄像机)的麦克风音量 LEVEL 设置在 1/3~1/2 范围，或相机显示屏显示麦克风不失真为最佳
无声/声音极小	检查发射器的麦克风插头、接收器的输出插头是否完全插入到插座内，并锁紧
	检查相机(摄像机)的音量设置，或手机 APP 的麦克风音量及权限设置
无线使用距离短	发射器和接收器受建筑物遮挡会影响使用距离
	发射器和接收器的天线尽量不被物体笼罩，以利于信号传送
	在人群众多的环境，人体会衰减无线电波，尽可能使发射和接收不被人群遮挡
	可能受到干扰，请更换发射器的频率
电池使用时间短	超出技术参数中的温度范围使用会影响电池的性能
	请使用高能碱性电池或大容量可充电电池为本机供电
风噪声大	麦克风的防风棉罩是否已安装
	不要在迎风的位置或电风扇前使用麦克风
手机干扰噪声	使用手机录音时，建议将手机设置为飞行模式，可避免干扰噪声的产生
其它干扰噪声	发射器或接收器低电量时，产品性能降低可能导致轻微噪声，应及时更换电池
	受到其它无线电设备干扰产生噪声，请更换发射器频率尝试解决
	受到其他电器设备的干扰，如电磁灶、电机、功放机等，请远离这些设备
如果出现的故障不包含在上表，请勿自行拆开修改，请联系厂家或当地经销商！	

■ 安全警告

为避免电击、高温、着火、辐射、爆炸、机械危险以及使用不当等可能造成的人身伤害或财产损失，使用本产品前，请仔细阅读并遵守以下事项：

1. 使用产品时请确认所连接设备与本产品功率是否匹配以及合理调整音量大小，不要在超过产品功率及大音量下长时间使用，以免造成产品异常和听力损伤；
2. 使用中若发现有异常（如冒烟、异味等），请立即关闭电源开关并拔掉电源插头，然后将产品送经销商检修；
3. 若产品需要使用可拆装电池时，严禁使用外壳绝缘材料破损的电池；请不要为非充电电池充电；
4. 废弃电池需放入指定的分类垃圾桶，不可作为儿童玩具或直接丢弃，以免造成安全隐患或影响环境；
5. 本产品及附件都应放置在室内干燥通风处，勿长期存放在潮湿、灰尘多的环境，使用中避免靠近火源、雨淋、进水、过度碰撞、抛掷、振动本机及覆盖通风孔，以免损坏其功能；
6. 若产品需要固定于墙壁或天花板上时，请确保固定到位，防止因固定强度不足导致产品发生跌落危险；
7. 使用该产品时需遵守相关安全规定，法律法规明确禁止使用场合请勿使用本机，以免导致意外事故；
8. 请不要自行拆机改装或维修，以防止出现人身伤害，如有问题或服务需求请联系当地经销商跟进处理。

■ 关于图标含义解释：

根据RL2004/108/EG和European Low Voltage Directive（欧洲低电压指令）RL2006/95/EG的测试结果表明，本产品符合欧共体关于电磁兼容性的成员国法律整合的指令中所规定的限值。

未经合规方明确批准的变更或修改可能会使用户失去操作设备的权限。此设备符合FCC规则第15条部分的要求。操作须符合以下两个条件：

（1）此设备可能不会造成有害干扰，并且

（2）此设备必须接受接收到的任何干扰，包括可能导致意外操作的干扰。

此符号表示，根据WEEE指令(2012/19/EU)和国家法律，由于这种类型的废弃物会有潜在的有害物质，可能对环境和人类健康产生负面影响，所以本产品不应与您的家庭垃圾一起处置，应将本产品应交由授权的电气和电子设备(WEEE)回收站回收。同时，您在正确处理本产品的同时将有助于自然资源的有效利用。如需了解更多有关您可以在何处放置废物回收设备的信息，请联系您当地的城市办事处、废物管理局或家庭废物处理服务部门。

■ 环保说明

产品中有毒有害物质或元素的名称及含量标识表

部件名称	有毒有害物质或元素					
	铅 (Pb)	汞 (Hg)	镉 (Cd)	六价铬 (Cr(VI))	多溴联苯 (PBB)	多溴二苯醚 (PBDE)
塑料部件	○	○	○	○	○	○
金属部件	×	○	○	○	○	○
电路板组件	×	○	○	○	○	○
线缆	×	○	○	○	○	○

本表格依据SJ/T 11364的规定编制。

○: 表示该有害物质在该部件所有均质材料中的含量均在 GB/T 26572规定的限量要求以下。

×: 表示该有害物质至少在该部件的某一均质材料中的含量超出 GB/T 26572规定的限量要求。

此标志为产品的环保使用期限标志，

且此标保使用期限只适用于产品正常工作的温度和湿度等条件。

Preface……19
Features……19
Application……19
Product content……20
Mono Channel……20
Dual Channel……20
Specification……21
System Specification……21
Transmitter……21
Receiver……22
Function instruction……21
Transmitter……23
Receiver:……25
Operation instruction……28
Transmitter installation and connection……28
DSLR/interchangeable lens digital camera
installation and connection……28
Professional camera installation and connection……29
Cell phone installation and connection……30
Volume adjusting method……31
Matching frequency method……31
Caution……33
Trouble shooting……33
Safety instruction……35
About the meaning of icon……35

■ Preface

Dear Customer,

Thank you for purchasing Takstar SGC-200W Wireless Camera Microphone . Please read the user manual carefully before operation and keep it for reference in future.

If you have any question or suggestion, please contact our local dealer.

■ Features

1. Tailored for interview, video recording, suitable for camera/DSLR/cell phone, etc
2. UHF transmission without the trouble of cable connection
3. Automatic matching technology, easy operation, high anti-interference, about 100m operation range in open area
4. Real time audio monitoring function to monitor the recording status
5. Adjusting function of monitoring volume and recording volume to suit for different equipment application
6. Low cut function to reduce ambient noise effectively; clearer picking up
7. Dual channel independent output and combo output for convenient post processing

   Note: only dual channel model has this function.
8. Type-C power connector to link with external power supply
9. Two Alkaline dry batteries last for about 10h operation

■ Application

Interview, video recording, program host, etc

■ Product content

Mono Channel

Receiver ..... 1 pc
Transmitter ..... 1 pc
Lavalier microphone ..... 1 pc
Mic clip ..... 1 pc
Windscreen ..... 1 pc
3.5mm audio cable..... 1 pc
3.5mm to XLR audio cable ..... 1 pc
Cell phone conversion cable ..... 1 pc
AA battery ..... 4 pcs
Antenna ..... 1 pc
User manual ..... 1 pc

Dual Channel

Receiver 1pc
Transmitter ..... 2 pcs
Lavalier microphone ..... 2 pcs
Mic clip ..... 2 pcs
Windscreen 2pcs
3.5mm audio cable..... 1 pc
3.5mm to XLR audio cable ..... 1 pc
Cell phone conversion cable ..... 1 pc
AA battery ..... 6 pcs
Antenna ..... 2 pcs
User manual ..... 1 pc

■ Specification

System Specification:

Frequency Range：470~960 MHz (frequency band)

Channel Quantity：mono/dual channel

Frequency Band Quantity: 50 frequency bands (mono)

Each of A/B has 25 frequency bands (dual channel)

FM Width：30MHz

Frequency Band Interval：600KHz

Modulation：FM

Mute Control：frequency guide

Frequency Response：20Hz~18KHz

Frequency Stability：±0.015%

S/N Ratio：≥92dB A+（line out）

Distortion：≤0.8% （at 1KHz）

Operation Range：approximate 100m（open area）

Cartridge：condenser omnidirectional

Transmitter:

Microphone Input: 3.5mm

Power Supply：2 AA batteries

Power：≤10mW

Low Cut：200Hz 5dB/Oct

Operation Time: approximate 10h(based on the battery capacity)

Dimension(LxWxH): 90x65x25mm

Weight：approximate 83g

Receiver:

Built-in Power Supply：2 AA batteries

External Power Supply：Type C connector

Antenna Connector：SMA/impedance 50Ohm

Sensitivity：≤-80dBm (wired test)

Audio Output：3.5mm line out +3.5mm headphone output

Headphone Output Power: 25mW(RMS)@32Ω

Operation Time: approximate 10h (mono)

8h (dual channel)

(based on the battery capacity)

Dimension(LxWxH): 90x65x25mm

Weight：approximate 96g

Note: The above data are obtained by Takstar Laboratory and have the right of final interpretation has the right of final interpretation.

■ Function instruction

Transmitter:

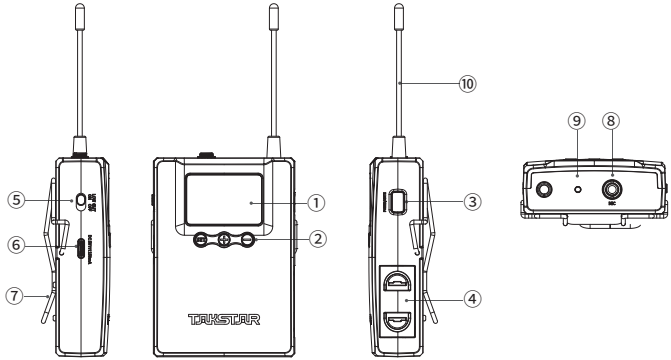

① LCD: displaying operation frequency, mic signal, battery power, etc.
② Function button: used for matching frequency.
③ Power switch: press for 2 seconds to turn on/off. Press shortly to turn on/off the mute function.
④ Battery compartment: used to load AA battery.
⑤ Low cut switch: set it to ON to filter LF ambient noise below 200Hz(the noise of transportation, air conditioner, vibration, etc). Set it to OFF to picking up normally.
⑥ Type-C power connector: link with external power supply to charge the transmitter.
⑦ Belt clip: used to pack the transmitter on the waist belt.
⑧ Mic connector: used to link with mic of 3.5mm connector.
⑨ Operation LED: it lights up green when charged fully, red during low power supply, red flashing when the power supply is seriously insufficient.
⑩ External antenna: 1/4 wave length antenna to increase the signal transmission range.

Transmitter LCD

Mono Channel

① Mute
② Operation frequency
③ Mic sound status
④ Low cut
⑤ Battery power

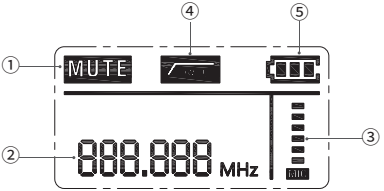

Dual Channel

① Mute
② Operation frequency
③ Mic sound status
④ Low cut
⑤ Battery power
⑥ Channel

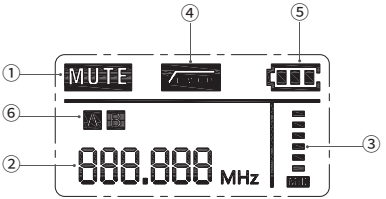

① Mute: appears when mute is on and disappears when mute is off. When the power supply is seriously insufficient, it mutes automatically to warn you replace the battery.

② Operation frequency: displays the transmitter operation frequency.

③ Mic sound status: it changes when the microphone signal changes.

④ Low cut: it displays when low cut is turned on, and disappears when off.

⑤ Battery power: it displays the transmitter battery power. When the battery power is insufficient, the battery symbol flashes.

⑥ Channel: dual channel transmitter has A/B transmitters (relatively displaying A/B) for matching frequency with dual channel receiver (only dual channel model has this function).

Receiver:

Mono Channel

① LCD
② Function button
③ Power switch
④ Battery compartment:
⑤ Antenna
⑥ Line out connector
⑦ Headset output connector
⑧ Operation LED
⑨Type-C power connector
⑩ Cold shoe
⑪ 1/4 nut
⑫ Knob

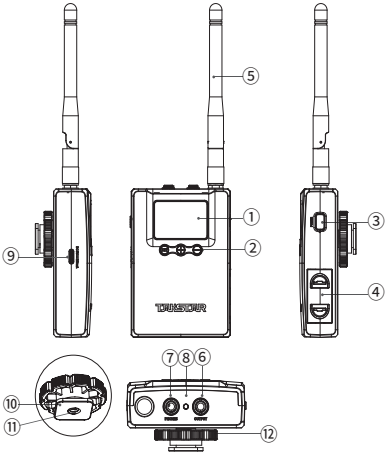

Dual Channel

① LCD
② Function button
③ Power switch
④ Battery compartment:
⑤ Antenna
⑥ Line out connector
⑦ Headset output connector
⑧ Operation LED
⑨Type-C power connector
⑩ Cold shoe
⑪ 1/4 nut
⑫ Knob
⑬ Mixing switch

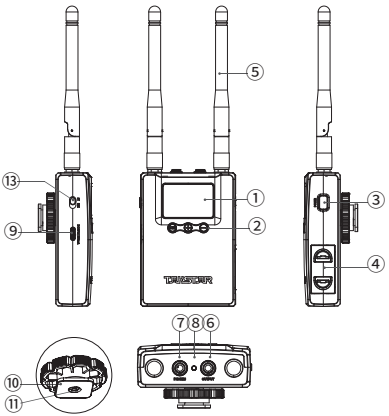

① LCD: displaying operation frequency, mic signal, battery power, etc.

② Function button: matching frequency, volume adjustment, etc.

③ Power switch: press for 2 seconds to turn on/off.

④ Battery compartment: used to load AA battery.

⑤ Antenna: external antenna for reliable signal receiving.

⑥ Line out connector: used to link output audio signal to the camera equipment.

⑦ Headset output connector: used to link with monitor headset to monitor the picking up effect.

⑧ Operation LED: it lights up green when charged fully, red during low power supply, red flashing when the power supply is seriously insufficient.

⑨ Type-C power connector: links with external power supply to charge the receiver.

⑩ Cold shoe: used to assemble the receiver on camera equipment.

⑪ 1/4 nut: used to assemble the receiver onto the selfie stick.

⑫ Knob: used to fix the receiver on camera equipment or selfie stick.

⑬ Mixing switch: set the switch to “ST”, the sound will be recorded and output in a stereo way for convenient post processing in A/B channel. Set the switch to “MIX”, the sound will be mixed and recorded and output, but the sound can not be processed in A/B channel (only dual channel model has this function.

Receiver LCD

Mono Channel

① Headset output

② Line out

③ Operation frequency

④ Microphone sound status

⑤ Headset/line output

⑥ Battery power

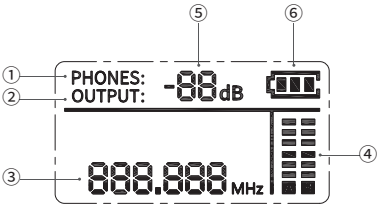

Dual Channel

① Headset output

② Line out

③ Operation frequency

④ Microphone sound status

⑤ Headset/line output

⑥ Battery power

⑦ Channel A frequency

⑧ Channel B frequency

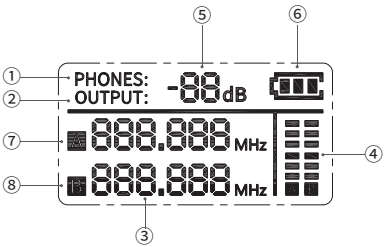

① Headset output: used to monitor the output volume adjustment.

② Line out: used for recording output volume adjustment.

③ Operation frequency: displaying the receiver operation frequency. The mono model has one group of operation frequency, and the dual channel has two groups of operation frequencies.

④ Microphone sound status: it changes when the microphone audio signal changes. Dual channel model has A/B microphone signals (A/B channel). The mono model only has one microphone signal.

⑤ Headset/line output: used for headset output volume in "PHONES" status, and for recording output volume in "OUTPUT" status.

⑥ Battery power: displaying the receiver battery power. When the power is insufficient seriously, the battery symbol flashes.

■ Operation instruction

Transmitter installation and connection

1. Loading battery: open the battery compartment and load two AA batteries according to right polar. Refer to the figure A below.
2. Plug the microphone connector into the transmitter MIC connector. Refer to the figure B below.

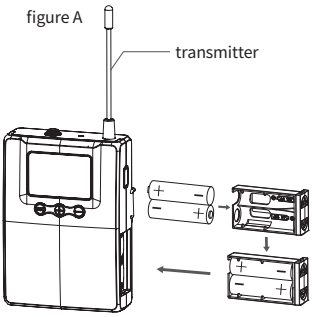

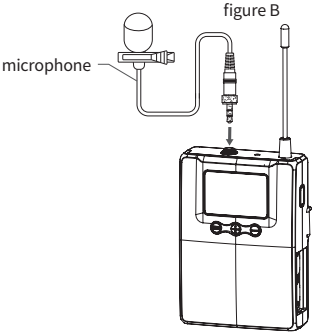

DSLR/interchangeable lens digital camera installation and connection

1. Insert the receiver cold shoe into the hot shoe slot of DSLR or interchangeable lens digital camera. Turn the knob clockwise to fix it. Refer to the figure below.
2. Connect one end with nut of 3.5mm audio cable with OUTPUT connector of the receiver, and the other end with MIC connector of the camera. Refer to the figure below.
3. Link the monitoring headset (buy additionally) with PHONES connector of the receiver. Refer to the figure below:
4. Turn on DSLR/interchangeable lens digital camera to test if the system works normally. If not, refer to the trouble shooting section to solve the problem.
5. According to the actual situation of DSLR/interchangeable lens digital camera and monitor headset, adjust the recording output and monitor output properly. Refer to the volume adjusting section for the details.

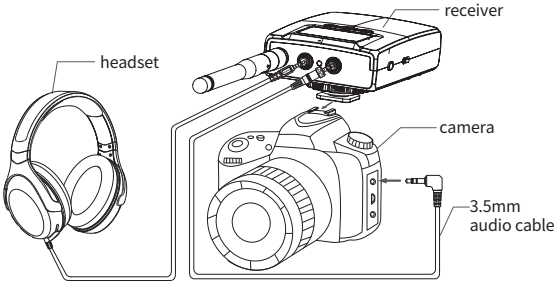

Professional camera installation and connection

1. Insert the receiver cold shoe into the hot shoe slot of pro camera. Turn the knob clockwise to fix it. Refer to the figure below.
2. Connect the nut end of 3.5mm to XLR audio cable with OUTPUT connector of the receiver, and the other end with XLR connector of the DSLR/camera. Refer to the figure below.
3. Link the monitoring headset (buy additionally)with PHONES connector of the receiver. Refer to the figure below:
4. Turn on DSLR/interchangeable lens digital camera to test if the system works normally. If not, refer to the trouble shooting section to solve the problem.
5. According to the actual situation of DSLR/interchangeable lens digital camera and monitor headset, adjust the recording output and monitor output properly. Refer to the volume adjusting section for the details.

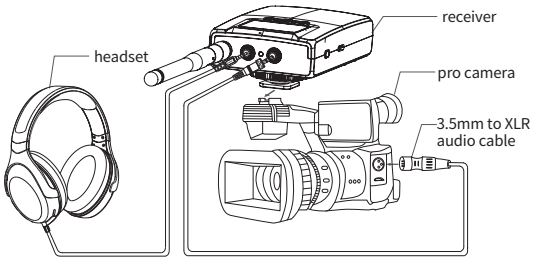

Cell phone installation and connection

1. Insert the receiver cold shoe into the cold shoe slot of selfie stick, or connect 1/4 nut of receiver with connector of selfie stick and fix the position. Refer to the figure below:
2. Connect the cell phone conversion cable with 3.5mm connector of cell phone/iPad/lap top. Connect the end with nut of audio cable with the OUTPUT connector of receiver, and the other end with connector of audio cable which is marked with “🎙”.
3. Connect the monitor headset (buy additionally) with the receiver “PHONES” connector. Refer to the figure below:
4. Turn on the cell phone to test if the recording works normally. If not, refer to the trouble shooting section to solve the problem.
5. Adjust the receiver recording output and monitor output properly according to the actual situation of cell phone/iPad/PC/monitor headset. Refer to the volume adjusting method section of the user manual.

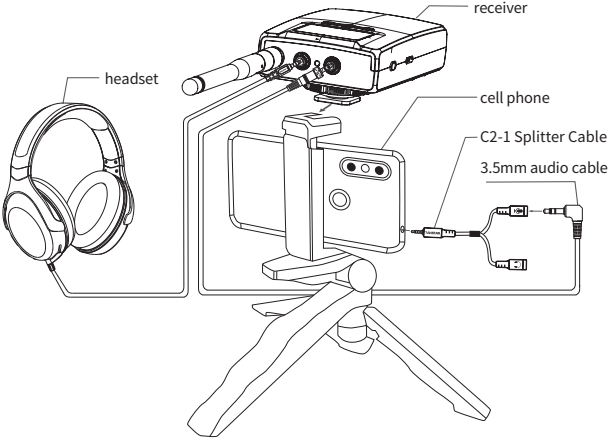

Volume adjusting method

Monitor volume adjusting

1. Press SET button of the receiver, “PHONES：XX” flashes (XX means the number displayed).
2. Press + to increase monitor volume and – to decrease (12 levels for selection).
3. Keep pressing SET button to confirm and exit.

Recording volume adjusting

1. Press SET button of the receiver. “OUTPUT：XXdB” flashes (XX means number displayed).
2. Press + to increase recording volume and – to decrease (-10dB～12dB for selection).
3. Keep pressing SET button to confirm and exit.

Note: due to DSLR/pro camera/cell phone/iPad have different requirement on recording input gain, adjust the output recording volume from recording equipment to the receiver properly, e.g. the recording output volume of DSLR/pro camera should be decreased properly, or the recording output volume of cell phone/iPad should be increased properly. The standard is that the recording has no noise or distortion.

Matching frequency method

The frequency has been matched in factory. If there is signal interference, match the frequency in the way below:

A: Matching of mono model

一、Matching automatically(keep the transmitter away from the receiver less than 1m）.

1. Keep pressing SET button of receiver for 2 seconds. Frequency flashes on LCD. Release the button. Keep pressing + or – button till the frequency changes from flashing status to “— — —” status. This means it enters into frequency scanning status. Release the button.

2. Keep pressing SET button of transmitter for 2 seconds. Frequency flashes on LCD. Release the button. Keep pressing + or – button till the frequency changes from flashing status to "— — —" status. Release the button.
3. It takes about 10 seconds to finish the frequency matching. When the frequencies of transmitter and receiver change from "— — —" status to static number, the automatic matching finishes. If the matching is successful, the transmitter frequency and the receiver frequency are the same and vice versa. Match the frequency again. .

二：Matching frequency manually

1. Keep pressing SET button of receiver for 2 seconds. Frequency flashes on LCD. Release the button. Keep pressing + or – button to adjust to the wanted frequency. After 5 seconds the receiver saves the selected frequency and exit, or you can keep pressing SET button for 2 seconds to exit.
2. Keep pressing SET button of transmitter for 2 seconds. Frequency flashes on LCD. Release the button. Keep pressing + or – button. After 5 seconds, the transmitter saves the selected frequency and exits, or you can keep pressing SET button for 2 seconds to exit.The matching is finished.

Note: when the transmitter and receiver are matched manually, if there is no operation to select frequency via +/- button after 5 seconds, they go back to the frequency status.

B: Matching frequency of dual channel model

1. Keep pressing SET button of receiver for 2 seconds to select channel. Press SET button to switch channel A or B.
2. The following steps of matching frequency are the same with that of the mono model. Please refer to the matching method of mono model.

Caution

1. The receiver is designed with omni-directional antenna. The antenna should be kept 0.5m away from the wall (especially metal).
2. The receiving range is relative to many reasons. If there is no large metal object in the transmission direction, the transmitting effect can be better.
3. If the receiving condition is not good enough, use the extension cable to link with high gain antenna or even antenna amplifier to promote the receiving effect.
4. Put the receiver front side to the operation direction. If the receiver is put in a metal rack, put the antenna to the front side for better receiving effect.
5. If the red LED flashes during operation, this means the battery power is insufficient, please replace the battery in time.
6. If the battery will not be used for more than one week, please take out the battery to prevent from battery broken or the product damaged.
7. Adjust the range from transmitter cartridge to the mouth properly, too near distance leads to signal distortion, but too far distance leads to S/N ratio reduced. It is recommended to keep the distance in a range 5～15cm.

Trouble shooting

Problem	Reason
Receiver disconnected with transmitter	Too far distance. Put them closer: the effective outdoor operation range is 100m in open area.The indoor operation range will be smaller.
	There is interference. Adjust the operation frequency.
Distortion during speaking	The microphone has high sensitivity. Adjust the range from mic to the audio source.
	The camera mic input level is too high. Adjust the mic volume level to 1/3~1/2 range, or the camera displays no distortion.

No sound or weak sound	Check the connection of transmitter mic connector and receiver output connector
	Check camera volume setting or cell phone App mic volume setting
Near wireless operation range	The use distance of transmitter and receiver will be affected if they are blocked by buildings
	The antenna of transmitter and receiver shall not be covered by objects as much as possible to facilitate signal transmission
	In the environment with a large number of people, the human body will attenuate the radio waves, so that the transmission and reception are not blocked by the crowd as much as possible
	May be interfered, please replace the transmitter frequency
Short battery operation time	Use outside the temperature range in the technical parameters will affect the performance of the battery
	Please use high energy alkaline battery or large capacity rechargeable battery to power the unit
Loud wind noise	Is the windscreen of the microphone installed
	Do not use the microphone in the windward position or in front of the fan
Cell phone interference noise	When recording with mobile phone, it is recommended to set the mobile phone to flight mode to avoid interference noise
Other interference noise	When the power of transmitter or receiver is low, the product performance may be reduced, which may cause slight noise, so the battery should be replaced in time
	Noise caused by interference from other radio equipment, please replace the transmitter frequency and try to solve it
	Please keep away from the interference of other electrical equipment, such as electromagnetic cooker, motor, power amplifier, etc
If the problem is not included in the above table, please do not disassemble and repair by yourself, please contact the manufacturer or local dealer!	

■ Safety instruction

To avoid electric shock, over temperature, catching fire, explosion, mechanical risk and hurt or property loss caused by improper use, please read the following items carefully before operation:

1. Make sure the power of connected equipment matches with that of this product. Adjust the volume to proper level during operation. Do not operate at high volume level to avoid hearing loss.
2. If abnormal phenomenon (smoke, abnormal smell) happens, please turn off the power switch and disconnect the power plug with power socket, and send the product to local dealer for maintenance.
3. Using battery of broken insulation material is forbidden to avoid short circuit. Do not charge the non-rechargeable battery.
4. Put the waste battery into classification dustbin rather than used as toy by children or discarded directly to avoid potential danger or affecting the environment.
5. The product and accessories should be put in dry and ventilated place rather than humid or dusty environment. Prevent the product from liquid, rain, water, over-colliding, throwing, vibrating, vent hole covered to avoid function destroyed.
6. When the product needs to be installed on wall or ceiling, please fix it tightly to avoid dropping risk.
7. Please abide by safety rules during operation. Do not use the product in the place prohibited by regulation or law to avoid accident.
8. Do not disassemble or repair the product by yourself to avoid hurt. If you have question or need service, please contact the local dealer.

■ About the meaning of icon

According to the test results of RL2004 / 108 / EG and European Low Voltage Directive RL2006/95/EG, this product conforms to the limit values stipulated in the directive of the European Community on the integration of the laws of the member states on electromagnetic compatibility.

NOTE: This equipment has been tested and found to comply with the limits for a Class B digital device, pursuant to part 15 of the FCC Rules. These limits are designed to provide reasonable protection against harmful interference in aresidential installation. This equipment generates uses and can radiate radio frequency energy and, if not installed and used in accordance with the instructions,may cause harmful interference to radio communications. However, there is no guarantee that interference will not occur in a particular installation. If this equipment does cause harmful interference to radio or television reception, which can be determined by turning the equipment off and on, the user is encouraged to try to correct the interference by one or more of the following measures:

- Reorient or relocate the receiving antenna.
- Increase the separation between the equipment and receiver.
-Connect the equipment into an outlet on a circuit different from that to which the receiver is connected.
-Consult the dealer or an experienced radio/TV technician for help

Changes or modifications not expressly approved by the party responsible for compliance could void the user's authority to operate the equipment. This device complies with Part
15 of the FCC Rules. Operation is subject to the following two conditions:
(1) this device may not cause harmful interference, and
(2) this device must accept any interference received, including interference that maycause undesired operation.

This symbol indicates that according to WEEE Directive (2012/19/EU) and national laws, this type of waste may have potential harmful substances, which may have negative impact on the environment and human health. All this product should not be disposed together with your household garbage, and should be handed over to the authorized electrical and electronic equipment (WEEE) recycling station for recycling. At the same time, you will help the effective use of natural resources while correctly handling this product. For more information about where you can place waste recycling equipment, please contact your local city office, waste management council or domestic waste treatment service.

注意事项：

1. 本单为保修凭证，请用户妥善保管，如有遗失，恕不保修或退换。
2. 保修期限制：购买之日起十二个月内。
3. 除了不可抗力事件损坏外，由本公司负责，免费维修。
4. 如属保管不善或使用不当造成的损坏，维修点将酌情收费。
5. 擅自拆卸维修者，不予保修。
6. 以上保修条款仅限于中国市场适用（不包含港澳台地区）。

产品服务保证书

姓名:_____ 电话:_____ 地址:_____

商品:_____ 型号:_____ 购买日期:_____ 年___ 月___ 日

维修记录栏(由维修员填写)	维修员签名	日期

◆广东得胜电子有限公司 ◆电话：400-6828-333 ◆地址：广东省惠州市博罗县龙溪街道富康一路2号

扫一扫，了解更多产品
Scan for more
product information

广东省电声工程技术研究开发中心
广 东 得 胜 电 子 有 限 公 司 制 造
地址：广东省惠州市博罗县龙溪街道富康一路2号
服务热线：400 6828 333　传真：0752 6383950
邮箱：xs@takstar.com
网址：www.takstar.com

Guangdong Takstar Electronic Co., Ltd.
Address: No. 2 Fu Kang YiRd., Longxi Boluo
Huizhou, Guangdong 516121 China
Tel: 86 752 6383644　Fax: 86 752 6383952
Email: sales@takstar.com
Website: www.takstar.com

GB/T 14198-2012
GB 8898-2011
9TGC600S1B